WIRING:

To -Chassis Ground.....**BLACK**

To +VDC for Activation.....**RED**

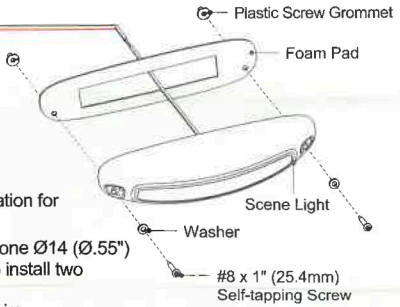

INSTALLATION:

1. Place the foam pad onto the desired mounting surface and mark the location for the two mounting screws and the wire routing hole location between the two screw holes.
   Note: Please refer to the illustration below to ensure the exact location for wire routing.
2. Drill two Ø6.35 (Ø.25") pilot holes for plastic screw grommets and one Ø14 (Ø.55") for wire routing. Then refer to the exploded-view drawing shown to install two washers and two #8 x 1" (25.4mm) self-tapping screws properly.
   Note: Deburr the wire routing hole thoroughly before feeding the wire.
3. Feed the wires through the foam pad and wire routing hole and mount the scene light with the supplied self-tapping screws.
   Note: Apply silicone around the mounting holes and wire routing hole for sealing if necessary.

MOUNTING DIMENSIONS:

